AAW

www.auini.com

AAW–68 Video Intercom System

Usage Manual

www.auini.com

shane@auini.com

0420519918

Thanks for using our products, our products are very easy to connection and installation, just only use the Ethernet cable to realize the audio/video phone call function.

INDOOR UNIT

Surface

- Alarm Button
- Monitor Button
- Unlock/Browse Button
- Talk Button

AAW-68R10C-70

Back potentiometer

Talk volume adjustment

Bell Volume Adjustment

- Alarm Button
- Unlock/Browse Button
- Talk/Monitor Button

AAW-68R11C-70

- Alarm Button
- Monitor Button
- Unlock Button
- Talk Button
- Browse Button

AAW-68R15C-43

Back potentiometer

Talk volume adjustment

Bell Volume Adjustment

Alarm Button
Monitor Button
Browse Button
Talk Button
Unlock Button

AAW-68R86C-70

Back potentiometer

- Bell Volume Adjustment
- Brightness Adjustment
- Contrast Adjustment
- Talk volume adjustment

SOS Alarm Button
Monitor Button
Browse Button
Talk Button
Unlock Button

AAW-68R88C-70

Back potentiometer

- Bell Volume Adjustment
- Brightness Adjustment
- Contrast Adjustment
- Talk volume adjustment

Function And Operation

Function:

It can be talk, monitor, unlock with outdoor unit.

Operation:

- Monitoring outdoor phone/outdoor station

  On standby status, press【Monitor】button, then start monitor the outdoor unit, click【Monitor】button again to return to standby status.

- Talk

  When there is call in, the screen of the indoor phone will show the video from corresponding outdoor unit and with a ring, press 【Talk】button to talk with the outdoor unit. And you can press【Unlock】to open the door.

- Ring Setting

  On standby status, long press【Unlock】 button to go into ring setting . Press【Alarm】 buttom to choose the song, press【Unlock】 button to confirm the songwhich you choosed, or will automatically choose it and return to standby status after no any operation within 40 seconds..

Difinition of the terminal port on indoor unit

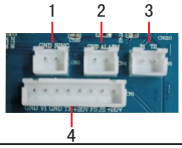

1、GND RING
2、GND ALARM
3、T1 T2
4、BUS terminal port

OUTDOOR UNIT

Appearance

AAW-68B06C

AVC-68B09C

Function:

Can be monitored by indoor unit, talk to indoor unit, can be unlocked by indoor unit.

Operation:

1、Call indoor unit

2、When standby status, press the call button on outdoor phone to call indoor unit, if the indoor unit is respond, then there will have ring tone with 30 seconds on outdoor phone, press the 【Talk】 button on indoor unit to talk with outdoor phone, after 45 seconds, talk will be stopped automatically.

3、When call the indoor unit, if there is "Di Di" short tone on outdoor phone, it means the indoor unit is busy now. If there is " Di Di Di" long tone, it means this outdoor phone do not connect to indoor unit.

The instruction for individule access control

1、 Initialization

Initialize the management password: Make sure the machine is power off, plug the short circuit board on JP202, and then power on, it will has a long "Di" tone, the management password was initialized to original password 1234, and then take off the short circuit board.

2、 Make the management card

Make sure on power off status, plug the short circuit board on JP201, and then power on, the green light will be on and with a "Di" tone at every 1.5 seconds, touch a card on the reaction area on the unit, there will be a long "Di" tone, it means this card become to management card. Take off the short circuit board.

3、 Delete all user card

Make sure on power off status, plug the short circuit board on JP203, and then power on, it will has a long "Di" tone, all user card was deleted.

4、 Add user card

On standby status, touch the management card on reaction area on the unit, there is a long "Di" tone with green light on, and then will has the short "Di" tone at every 1.5 seconds, then just add new user card is ok, every success for add new user card will has a long "Di" tone with red light on. It can add Max 2720 user card. Once you heard six "Di" tone, it means the capacity of the card user is full. Re-touch the management card on the reaction area again to exit the Add user card setting to return to standby status.

5、 Open the door by card

On standby status, take the valid card close to the reaction area, it will has a "Di" tone and lock open. If the card is invalid card, it will has "Di Di Di" three tones.

Terminal port on outdoor unit

AAW-68B09

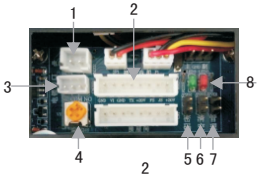

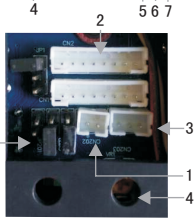

AAW-68B06

1、+20V DC power in	5、Jumper cap (password)
2、Connect to indoor unit	6、Jumper cap (delete)
3、Connect to electric lock	7、Junper cap(managment)
4、Volume adjustment	8、Indicator of access control

Wiring diagram for electric lock

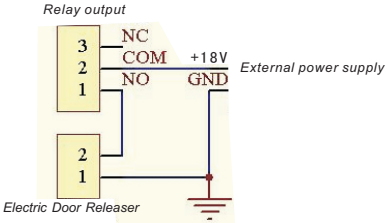

Indoor Unit Technical Parameter

- Audio output without distortion: >5mW
- Acoustic frequency response:500-3400Hz
- Display: 4.3 inch TFT color display / 7.0 inch TFT color display
- Resolution: 480*272 (4.3inch) / 800*480 (7.0 inch)
- Working voltage: DC15-20V
- Working Temperature: -20° C-55° C
- Power consumption: Standby :≤1W; Operating :≤10W

Outdoor Unit Technical

- Working voltage: DC14-20V
- Standby current: 15mA
- Max working current: 250mA
- Working temperature: -40—60℃
- Definition of camera: 520 TV line
- Respond: 500—3400Hz ±3dB。
- Max undistorted power output: 130mW
- Size: 171*106*53.5mm(68B09) 88.5*46*19.5mm(68B06)
- Inside size: 155*90*45mm(68B09)
- Card capacity: 2720pcs
- Card type: EM card or others which compatible with EM card
- Reaction distance: 5-10cm

Installation method

Suggest install the indoor unit on the wall, the height shoud be 145-160cm from ground.

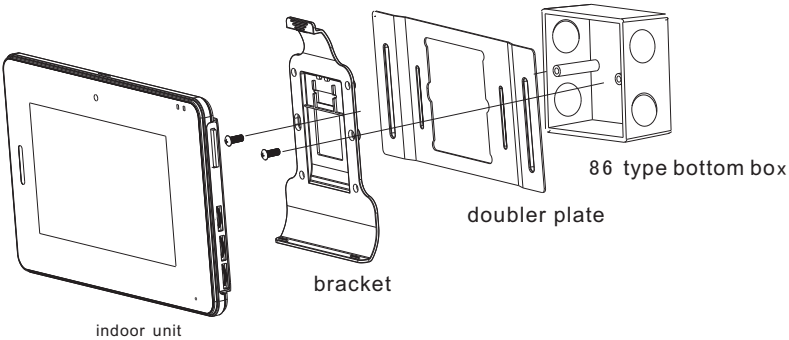

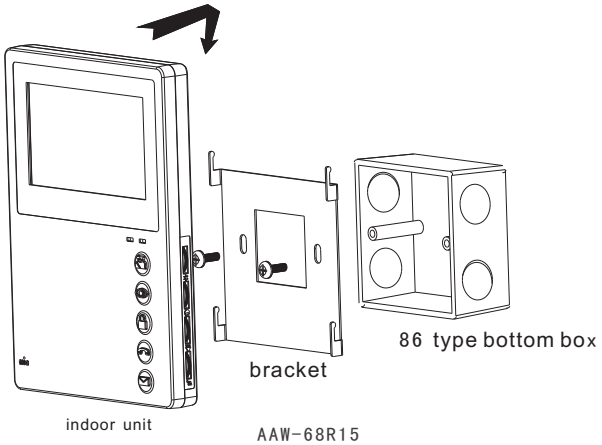
bracket
86 type bottom box
indoor unit
AAW-68R15

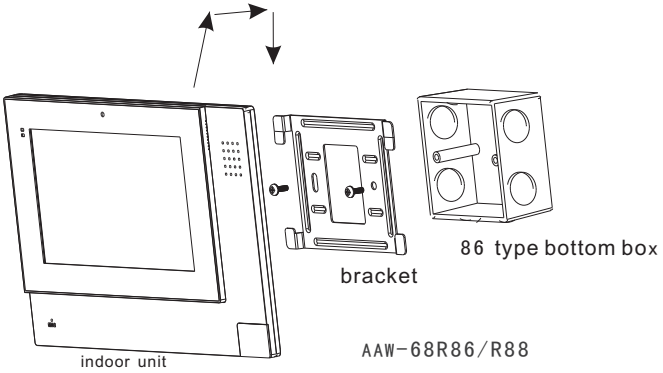
bracket
86 type bottom box
indoor unit
AAW-68R86/R88

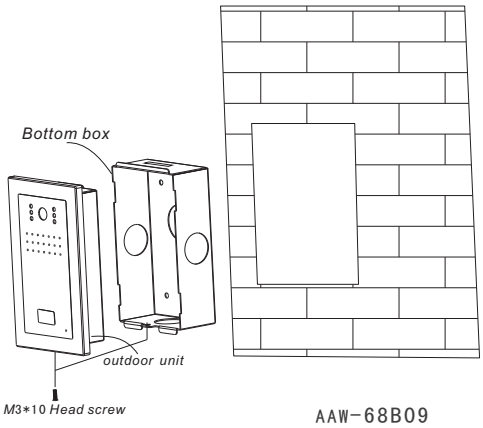
Bottom box
outdoor unit
M3*10 Head screw
AAW-68B09

ONE OUTDOOR UNIT / ONE INDOOR UNIT

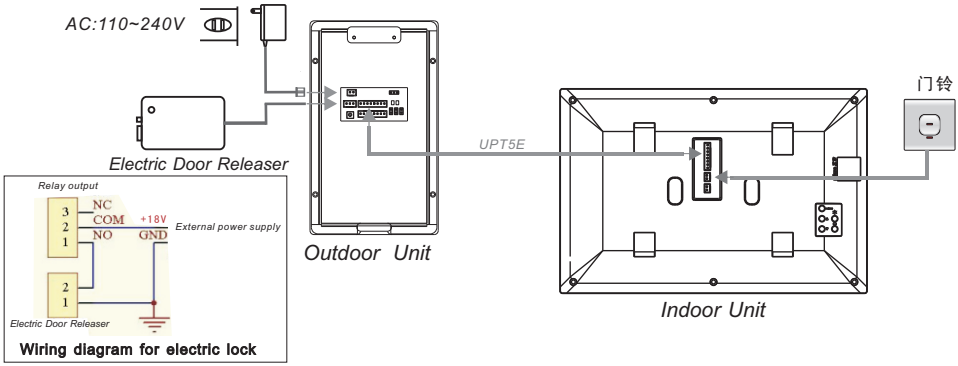

ONE OUTDOOR UNIT / TWO INDOOR UNITS

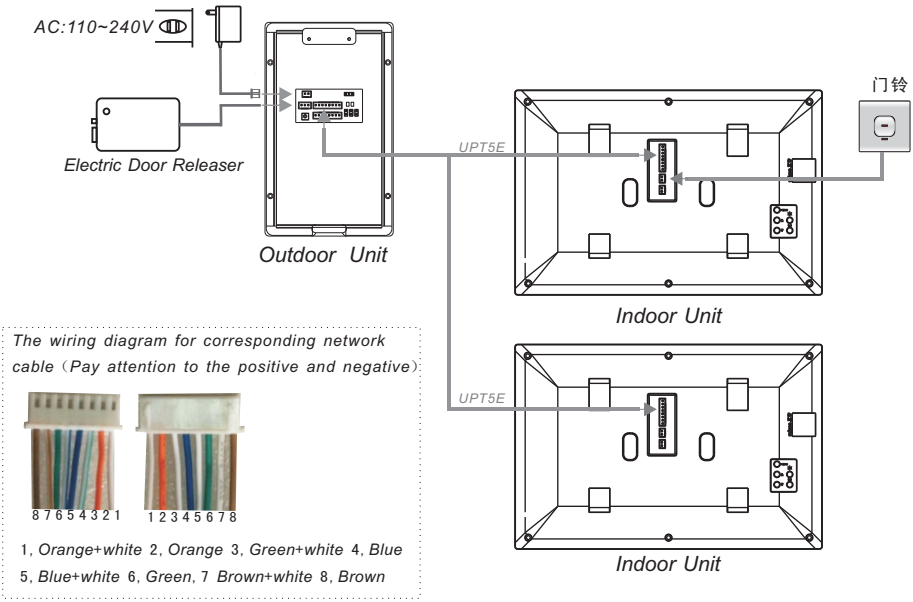

AAW
www.auini.com

www.auini.com
mel@auini.com
0420519918